Paper Reference(s) 9PH0/01

Pearson Edexcel Level 3 GCE

Physics

Advanced

PAPER 1: Advanced Physics I

Friday 23 May 2025 – Morning

Time: 1 hour 45 minutes

Diagram Booklet

THIS DOCUMENT MUST BE RETURNED TO PEARSON AT THE END OF THE EXAMINATION

In the boxes below, write your name, centre number and candidate number.

Surname					
Other names					
Centre Number					
Candidate Number					

Pearson

INSTRUCTIONS

There may be spare copies of some diagrams.

CONTENTS

Page

4 Question 3

5 Questions 6 and 7

6 Question 7

7 Questions 9 and 10

8 Question 9

9 Question 10

10 Question 11(a)

11 Question 12

12 Question 13

13 Question 13(a)

14 Question 14(a)

15 Question 15(a)

16 Question 15(c)

(continued on the next page)

CONTENTS continued.

17 Question 15(d)

18 Question 16 – NOT accurately drawn

19 Question 16(a)(ii) – NOT accurately drawn

20 Question 17

21 Question 17(c)

22 Question 18(a)

Spare Copies

23 Question 11(a) – Spare copy

24 Question 13(a) – Spare copy

25 Question 14(a) – Spare copy

26 Question 15(a) – Spare copy

Question 3

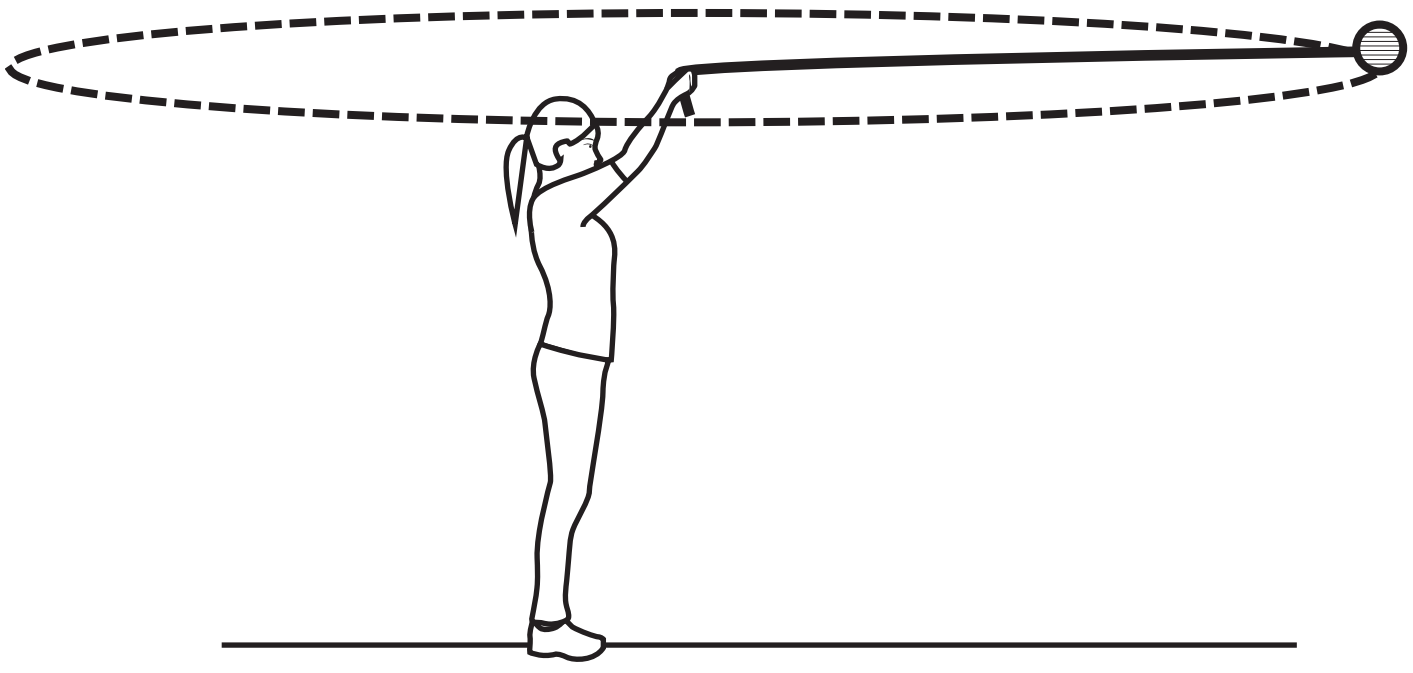

Questions 6 and 7

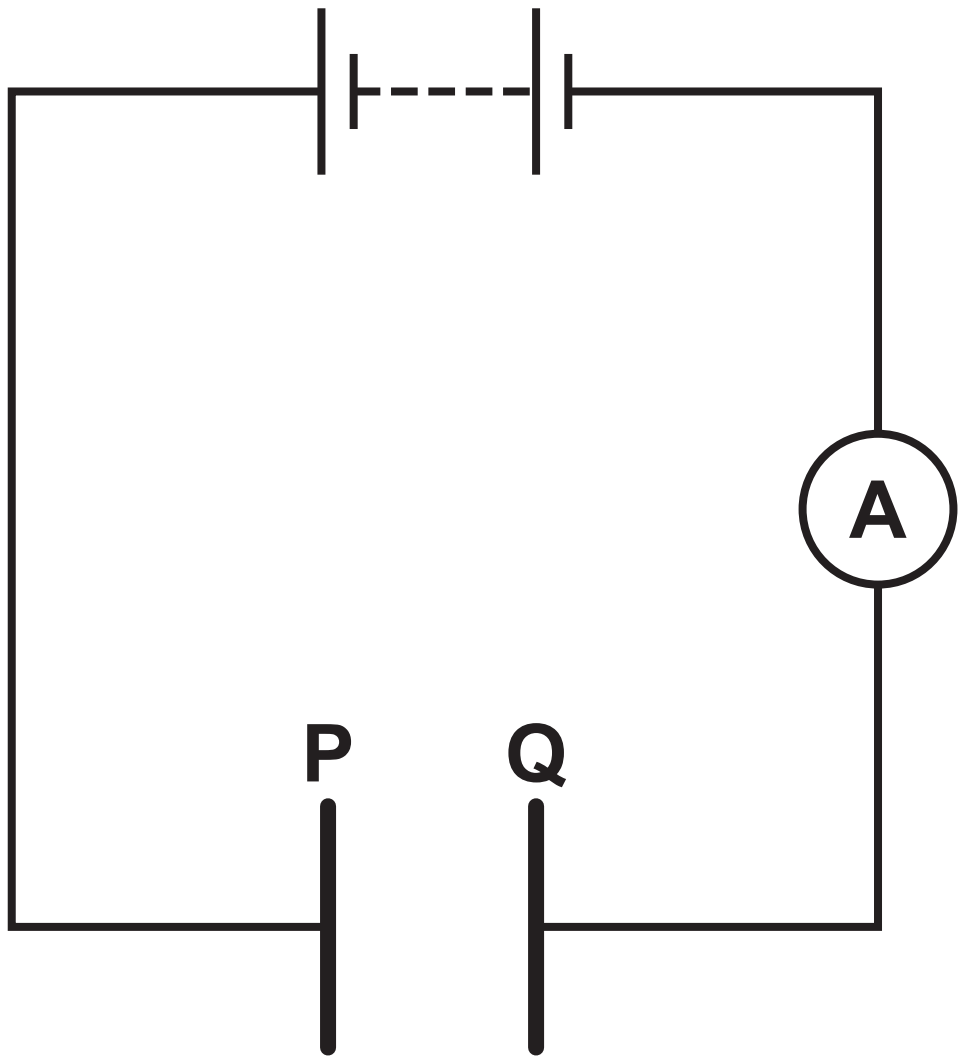

Question 7

graph **A**

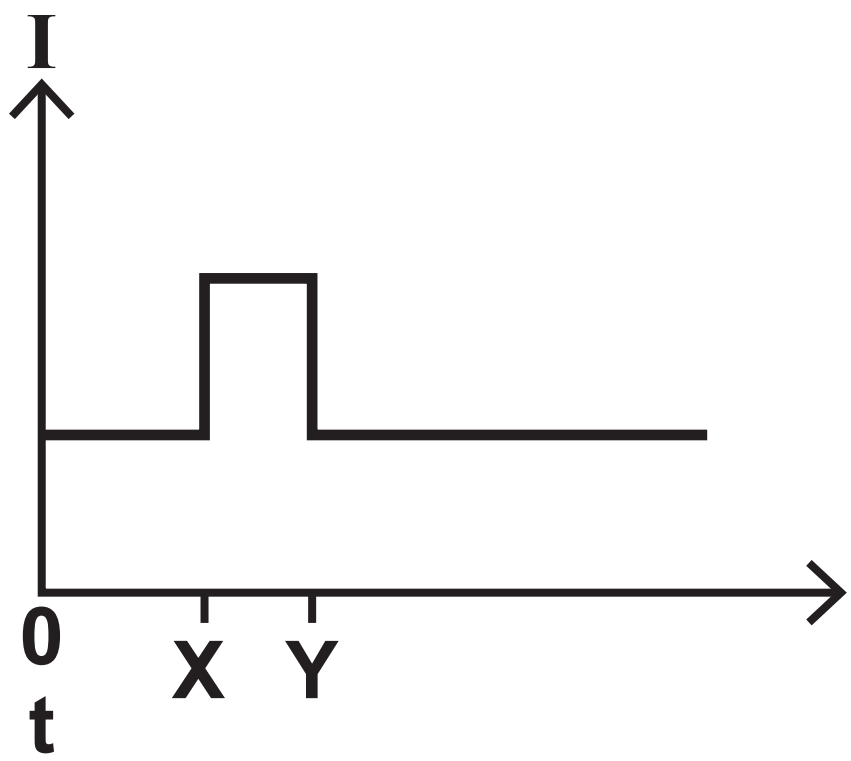

graph **B**

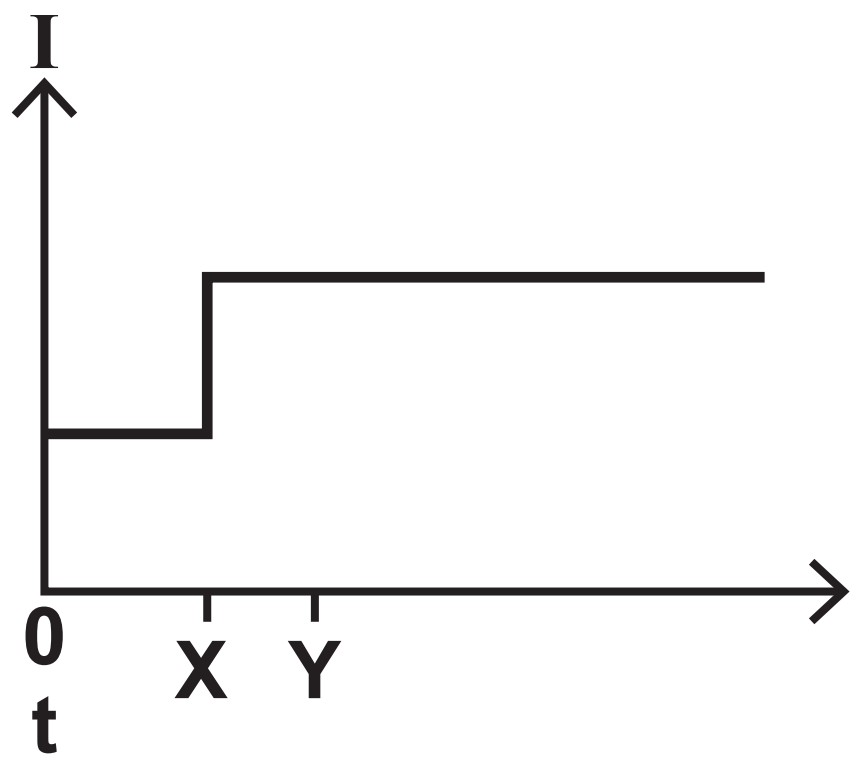

graph **C**

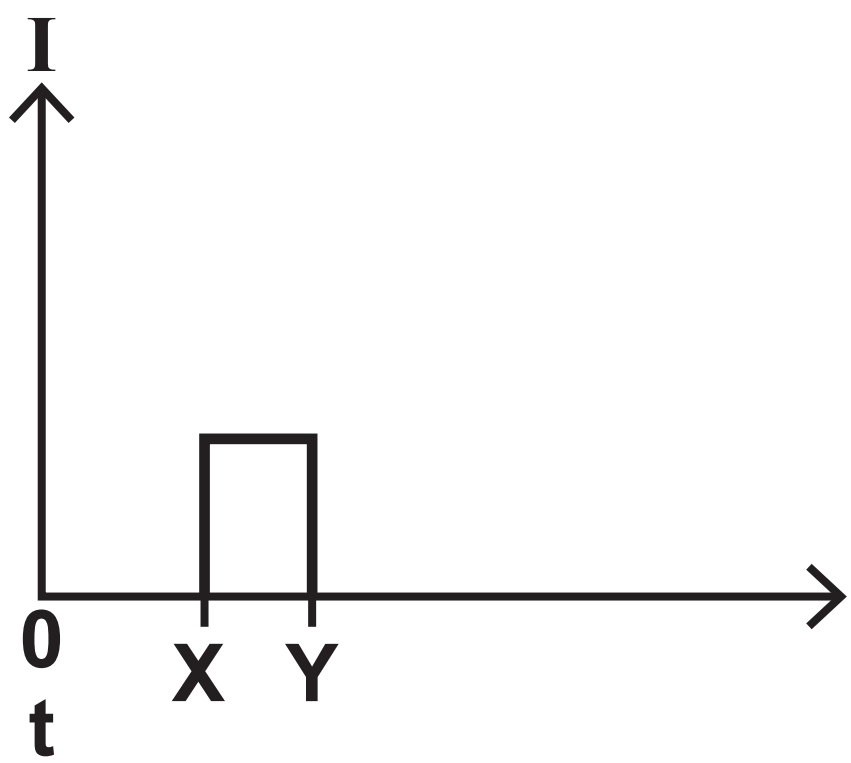

graph **D**

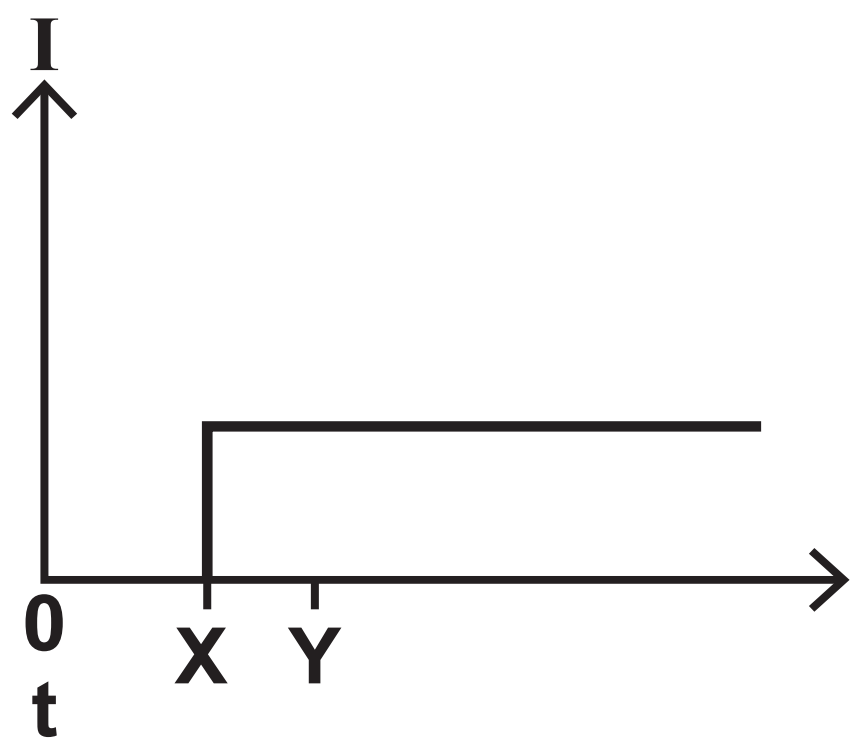

Questions 9 and 10

Question 9

diagram **A**

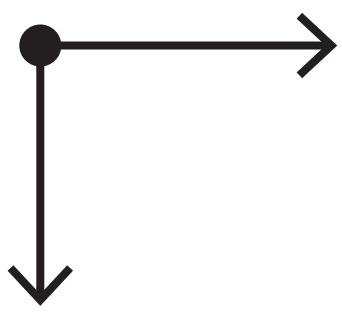

diagram **B**

diagram **C**

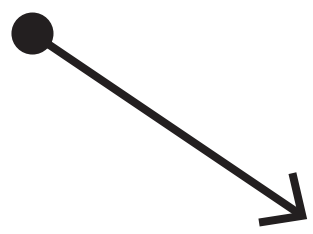

diagram **D**

Question 10

graph **A**

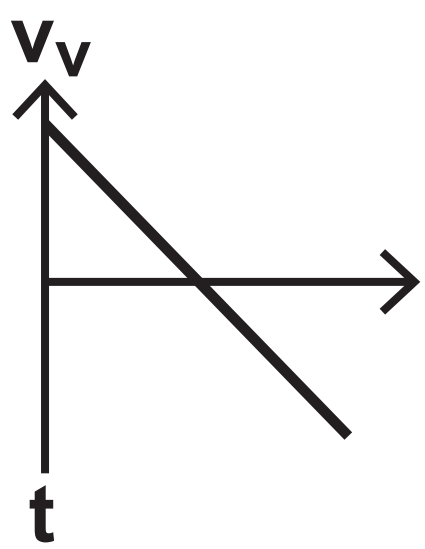

graph **B**

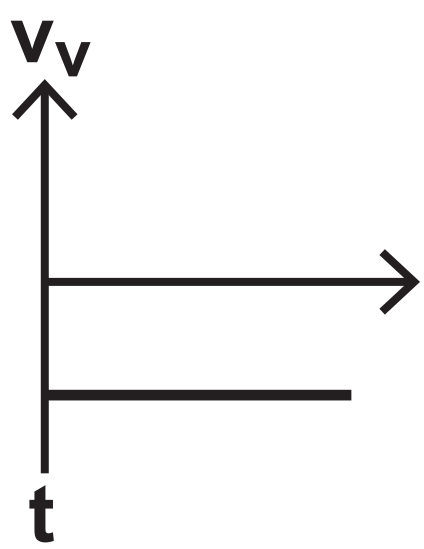

graph **C**

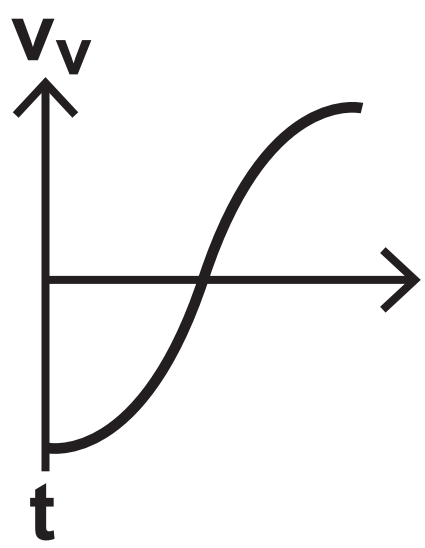

graph **D**

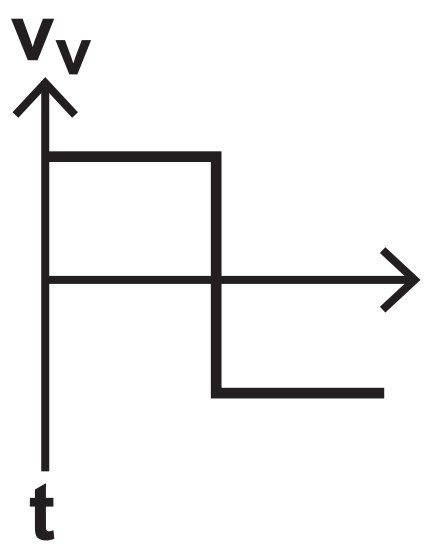

Question 11(a)

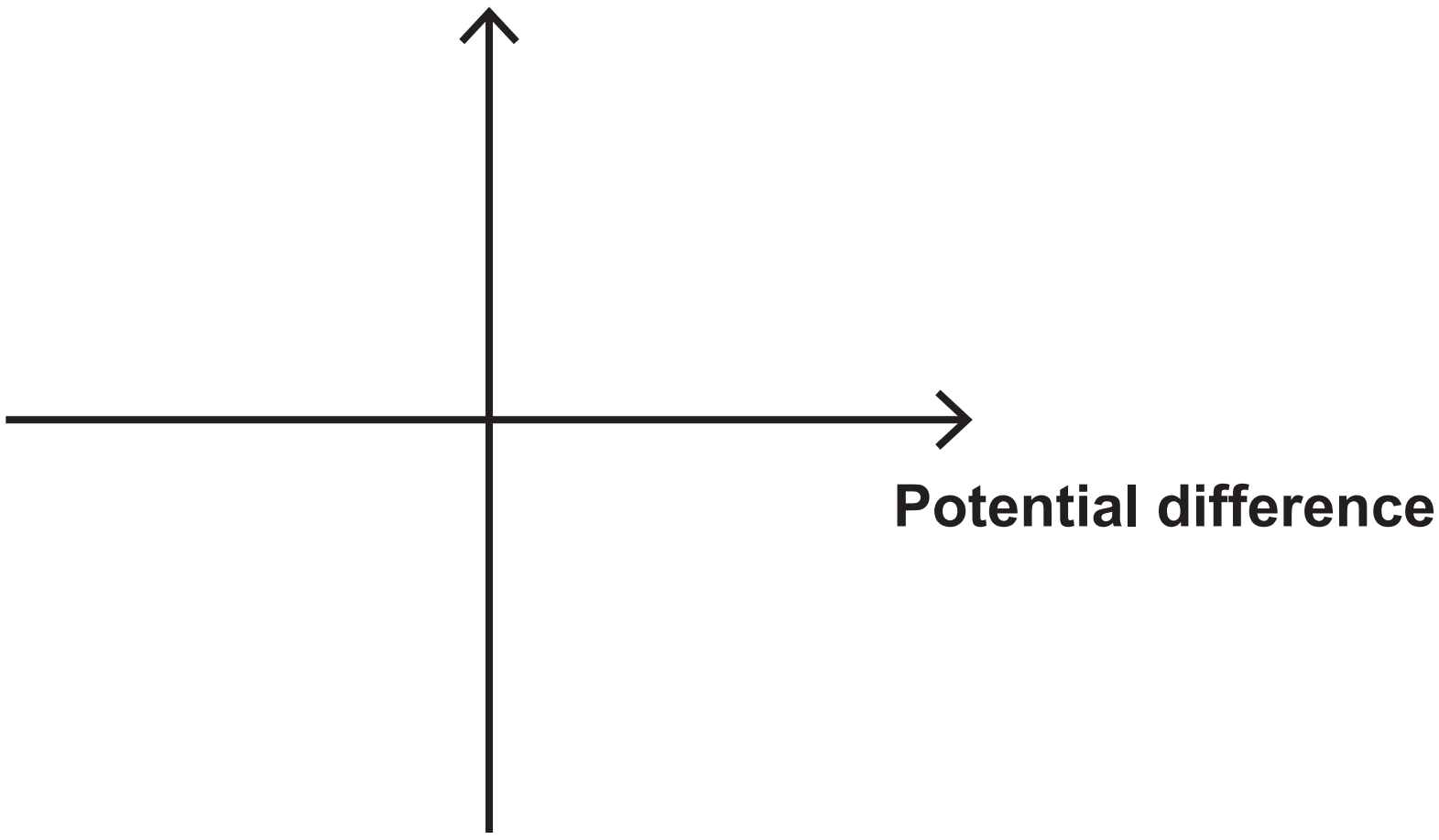

Question 12

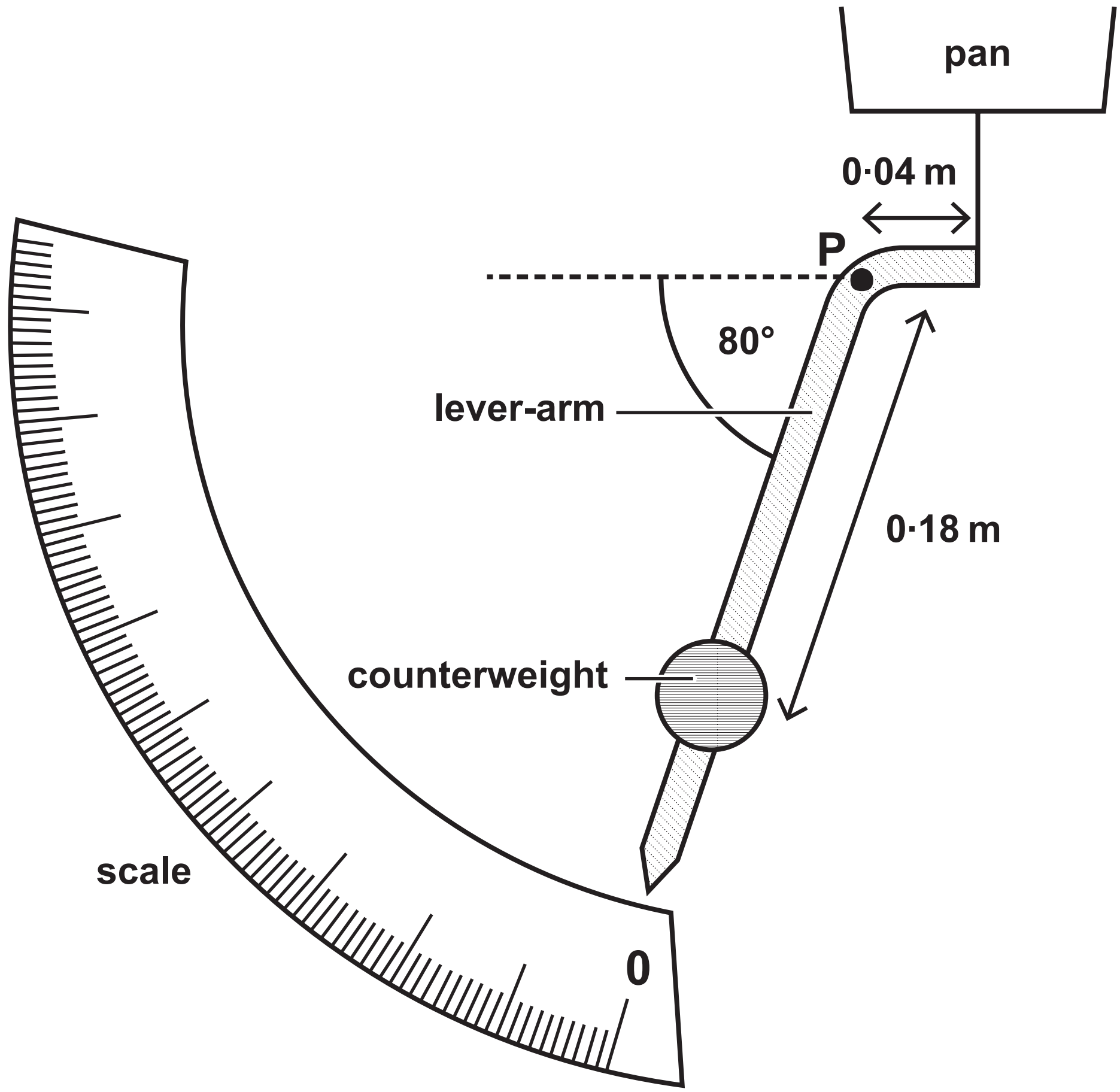

Question 13

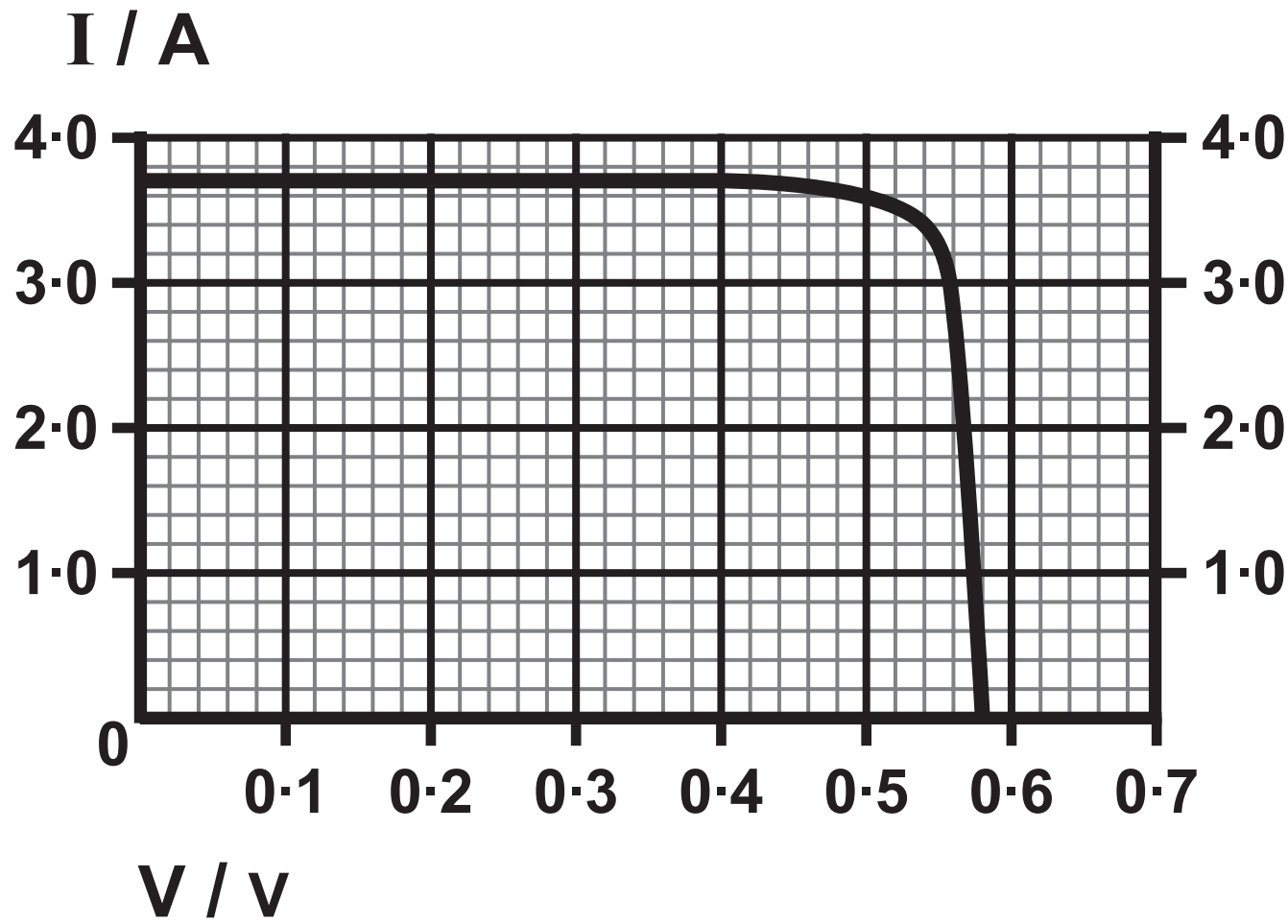

Question 13(a)

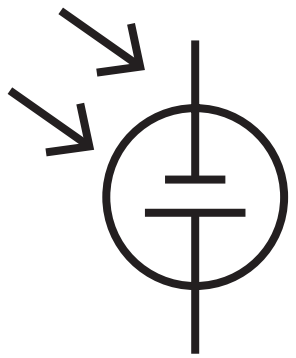

Question 14(a)

Question 15(a)

$\sum^{+} \longrightarrow$

Question 15(c)

Quark	Charge / e
u	+2/3
d	–1/3
s	–1/3

Question 15(d)

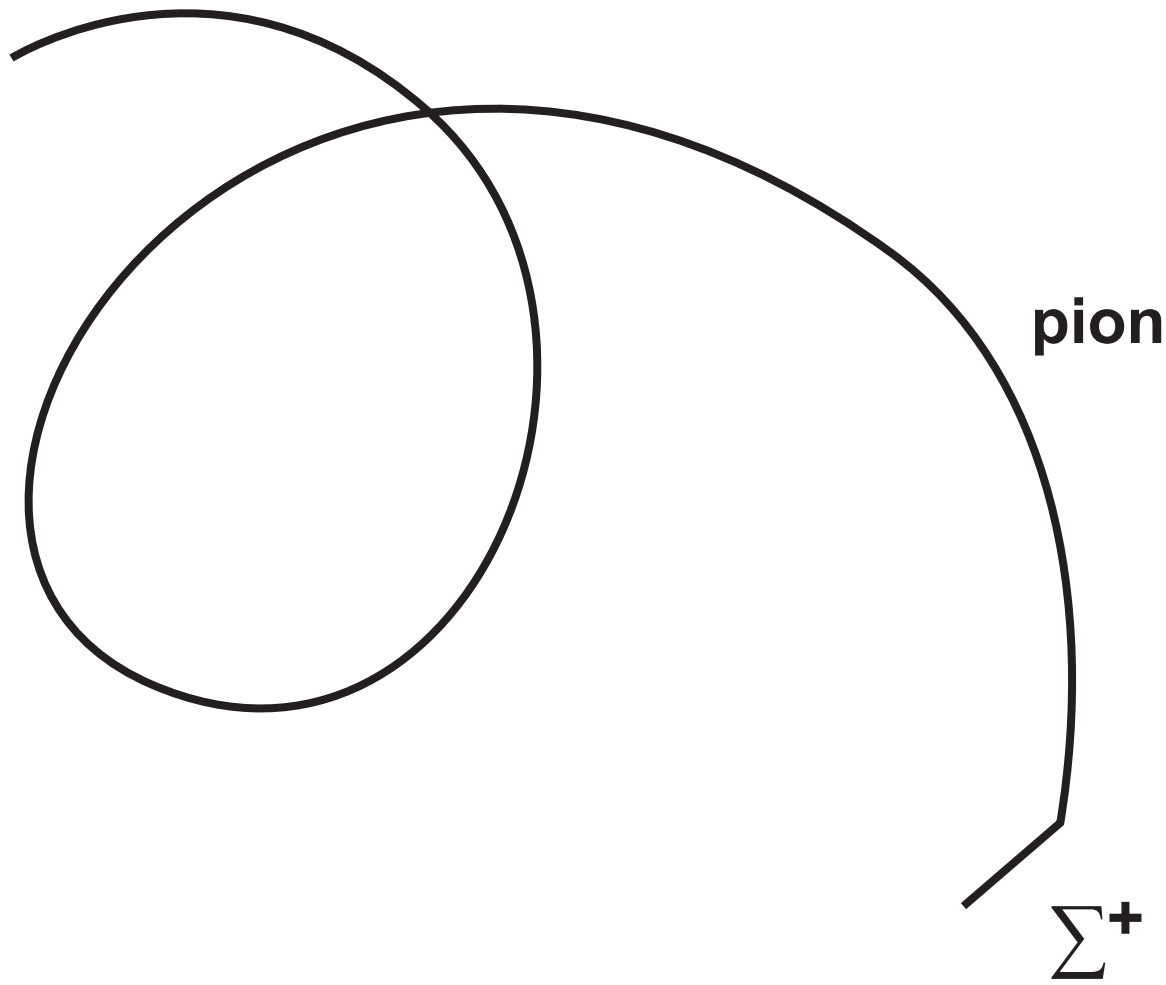

Question 16

Diagram NOT accurately drawn

VIEW FROM ABOVE

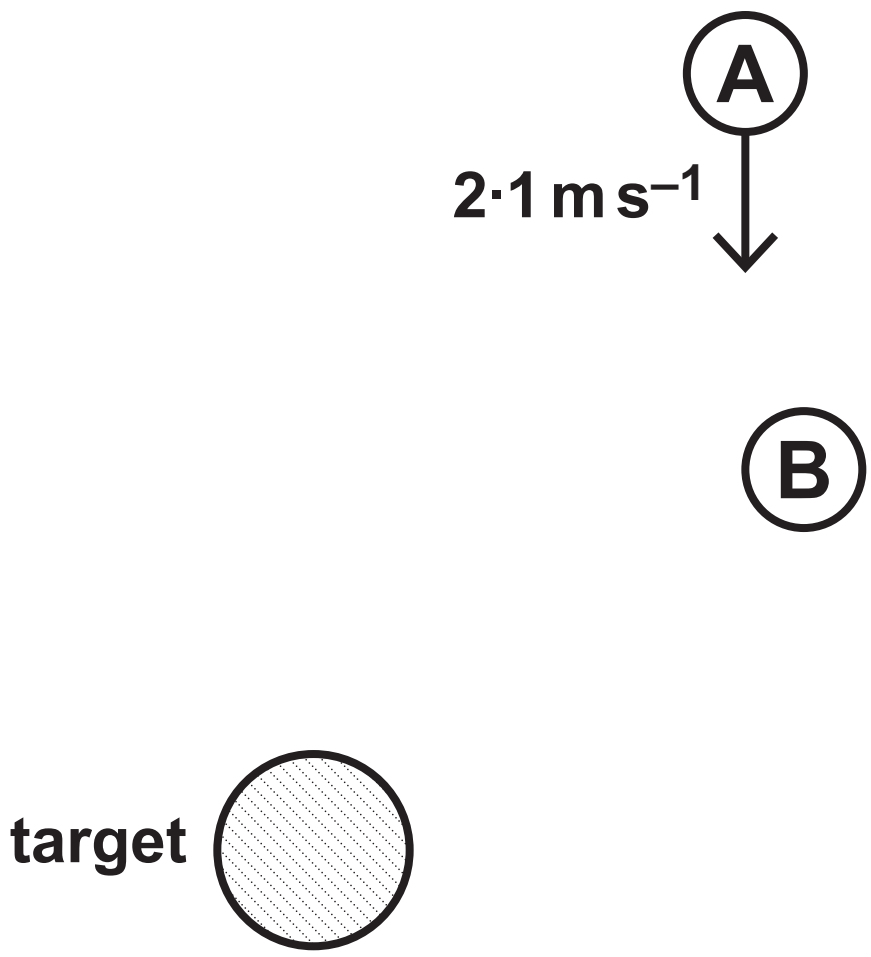

Question 16(a)(ii)

Diagram NOT accurately drawn

VIEW FROM ABOVE

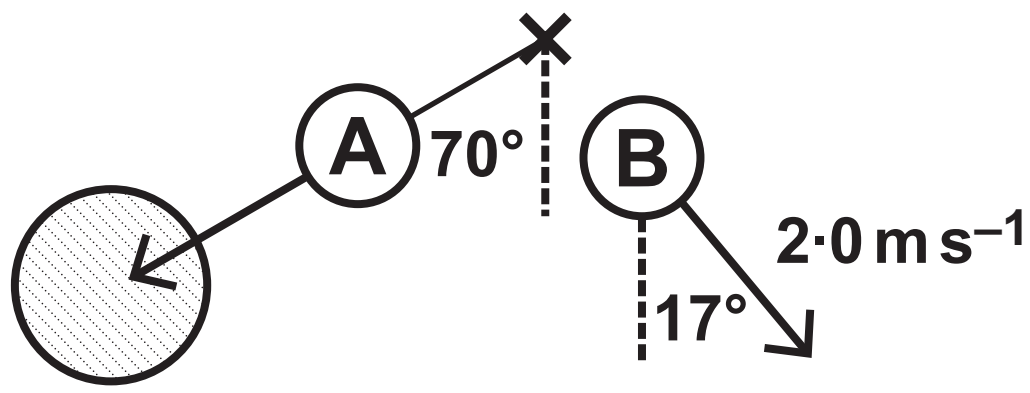

Question 17

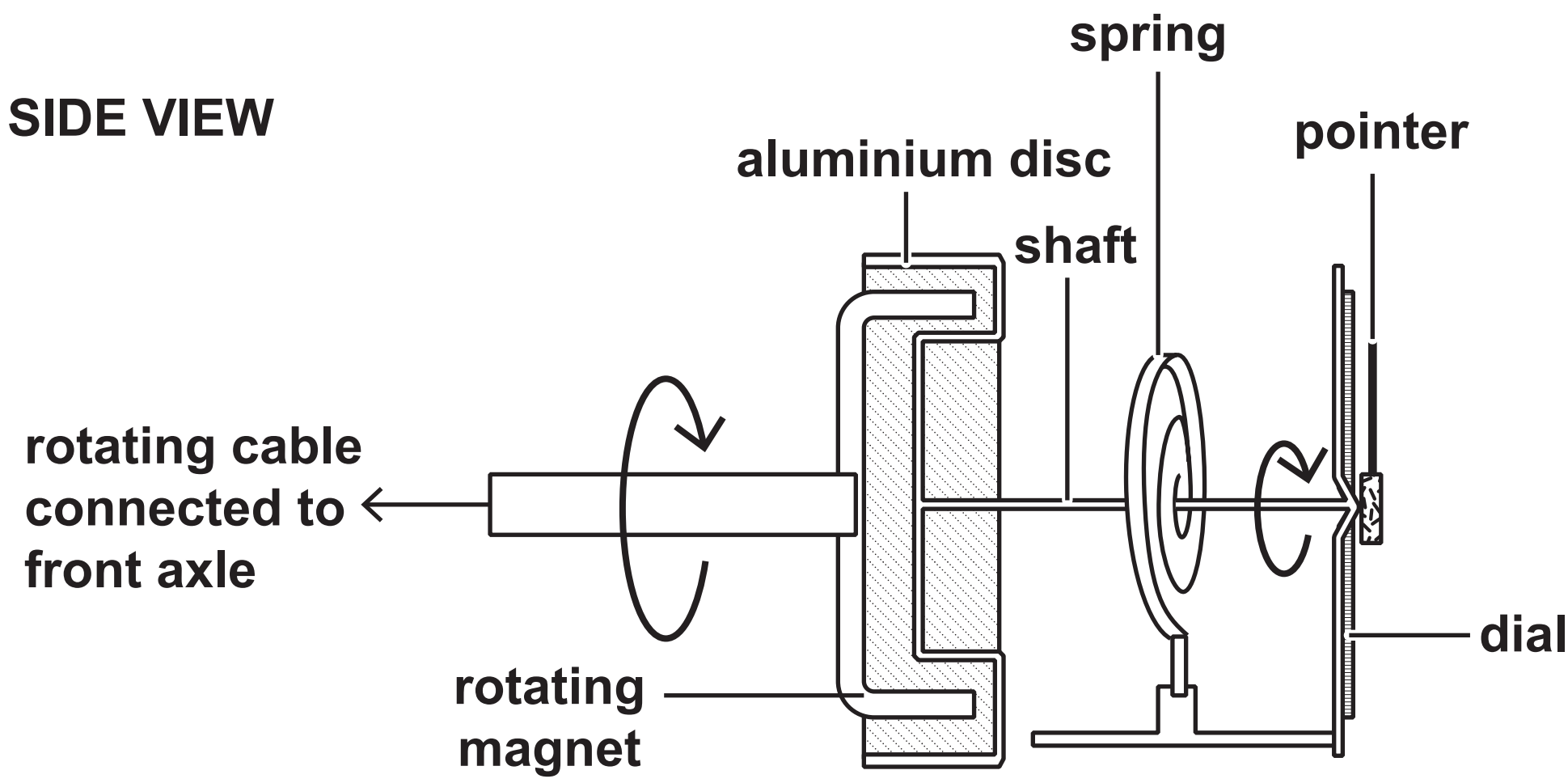
SIDE VIEW
spring
aluminium disc
pointer
shaft
rotating cable
connected to
front axle
dial
rotating
magnet

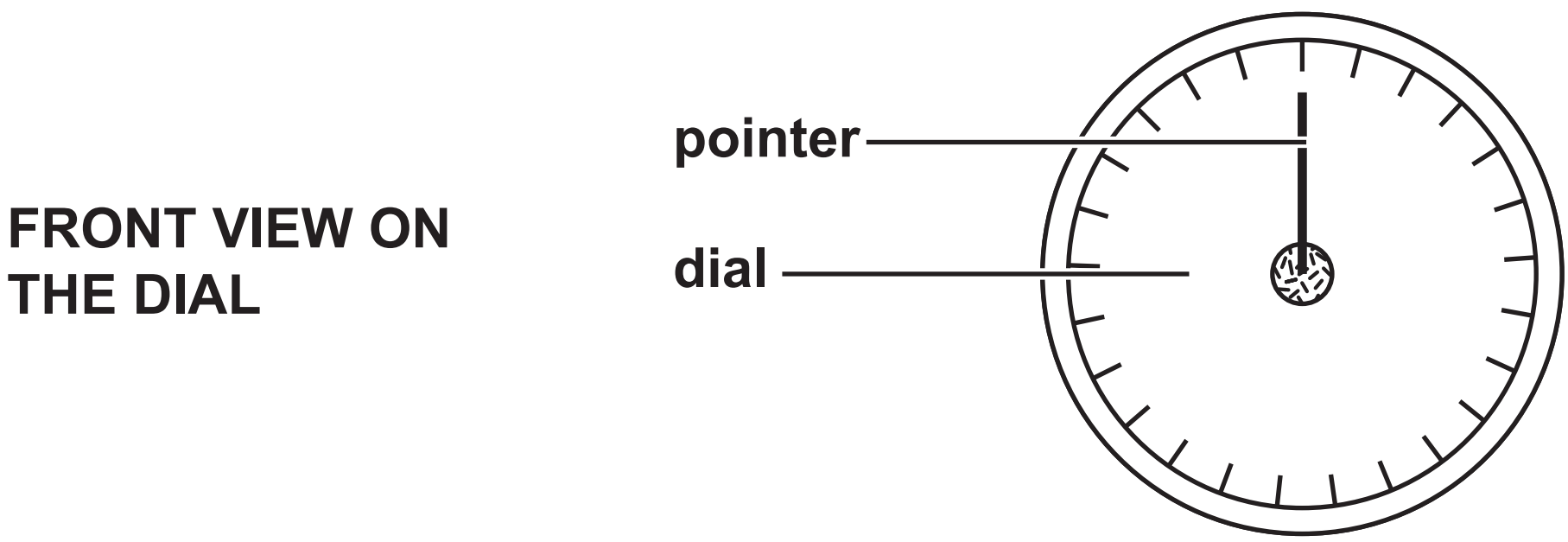
FRONT VIEW ON
THE DIAL
pointer
dial

Question 17(c)

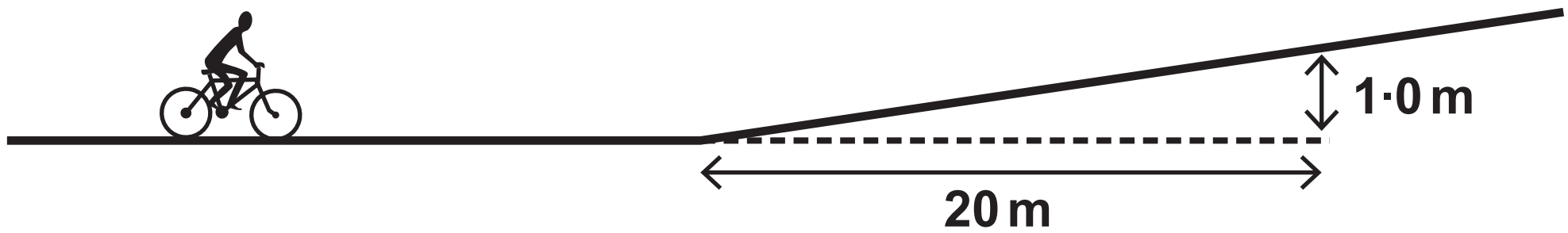

Question 18(a)

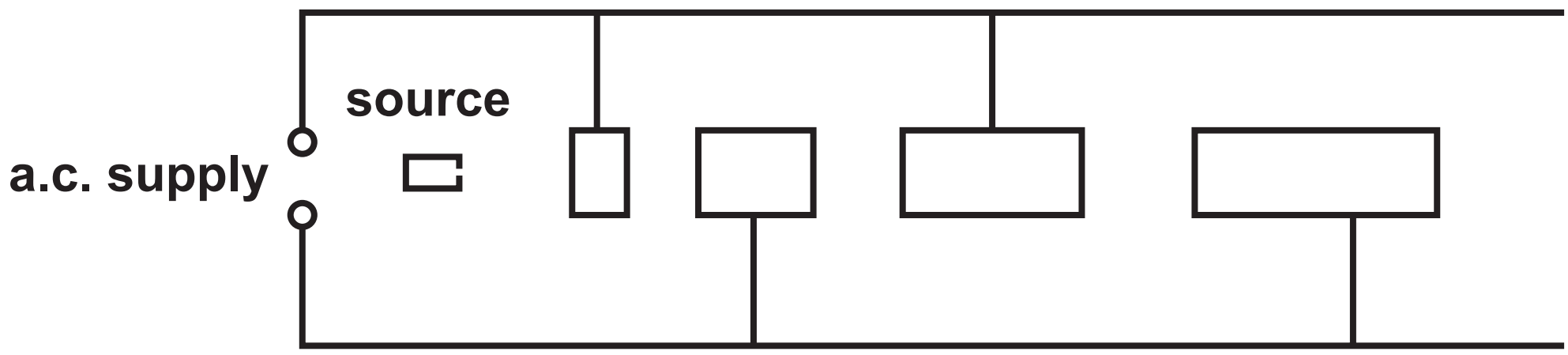

Question 11(a) – Spare copy

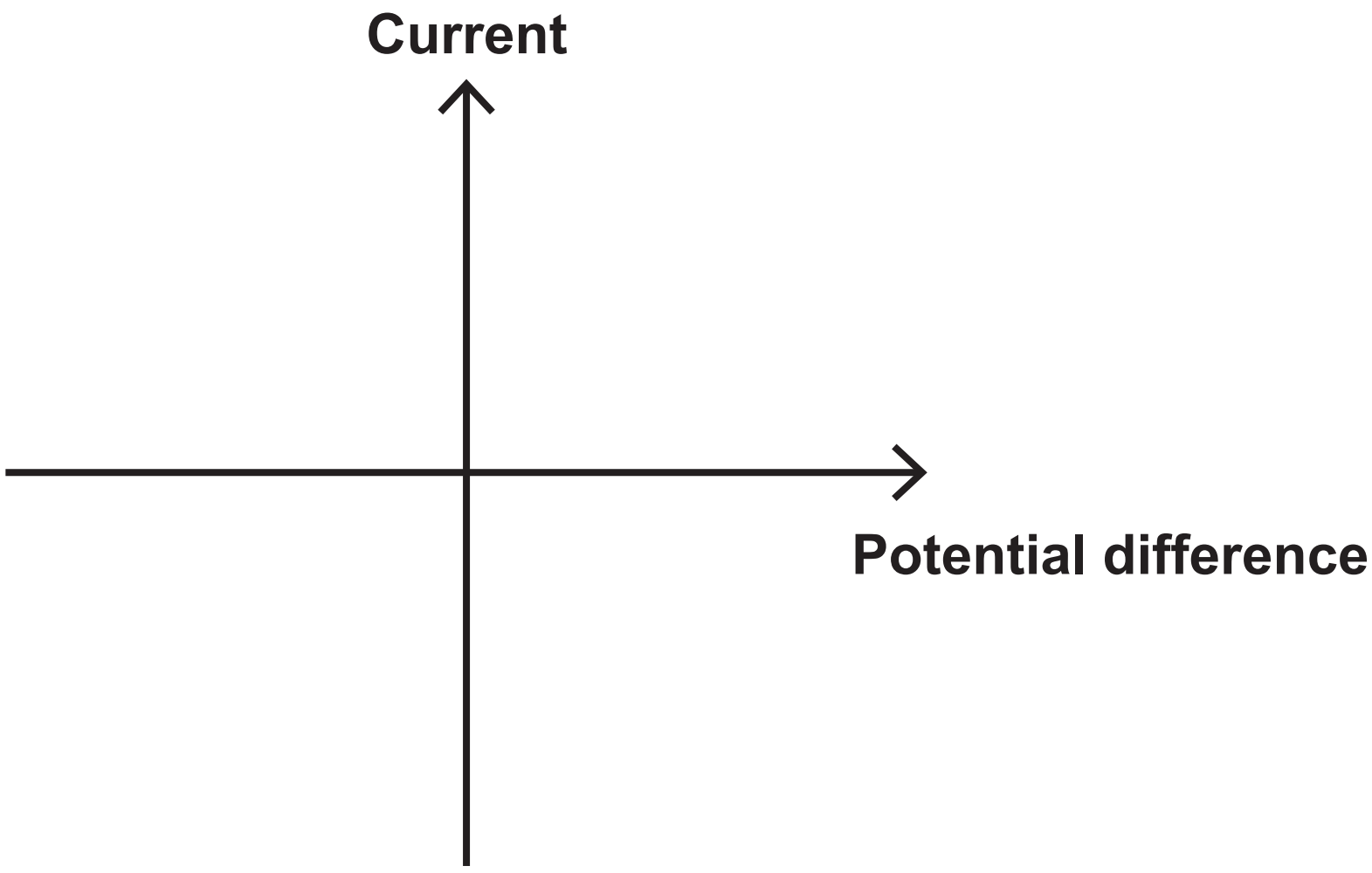

Question 13(a) – Spare copy

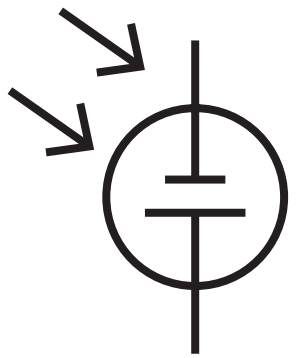

Question 14(a) – Spare copy

Question 15(a) – Spare copy

$\sum^{+} \longrightarrow$